REAL MOTION
THE FUNCTIONAL COMPANY

EVOLVE ECON SERIES

EC-230

# Half Rack & Smith Machine

Plate-loaded strength training station



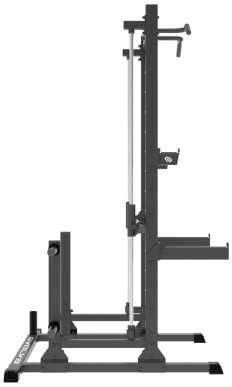

Side view

## Overview

The EC-230 combines a guided Smith bar and a half rack for free-barbell lifts in a single station. Its plate-loaded design gives gyms two ways to train with a barbell within one footprint.

**250 kg**
Maximum load

**77.5 kg**
Machine weight

**2 years**
Warranty

Dimensions **1404 × 1850 × 2343 mm**

SKU EV-PL-EC-230

Source and photos · Evolve Fitness

REAL MOTION
THE FUNCTIONAL COMPANY

**EVOLVE ECON SERIES / EC-230**

# Product Gallery



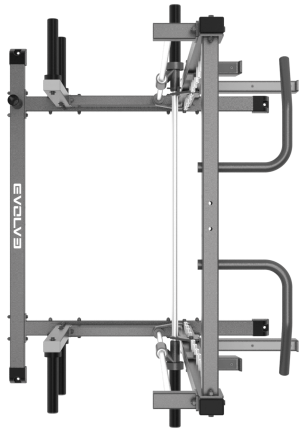


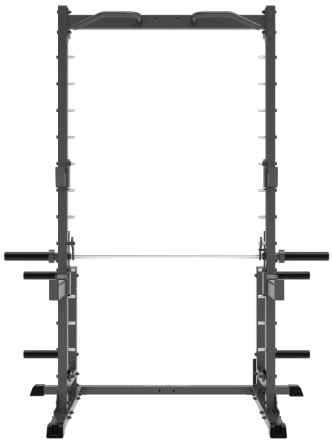

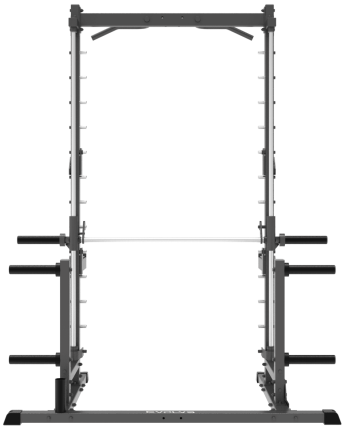

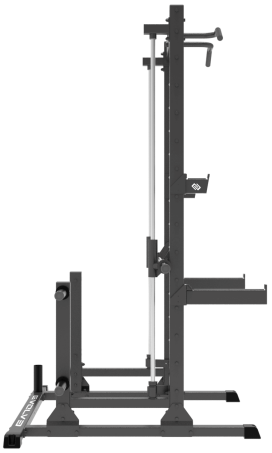

Photos · Evolve Fitness